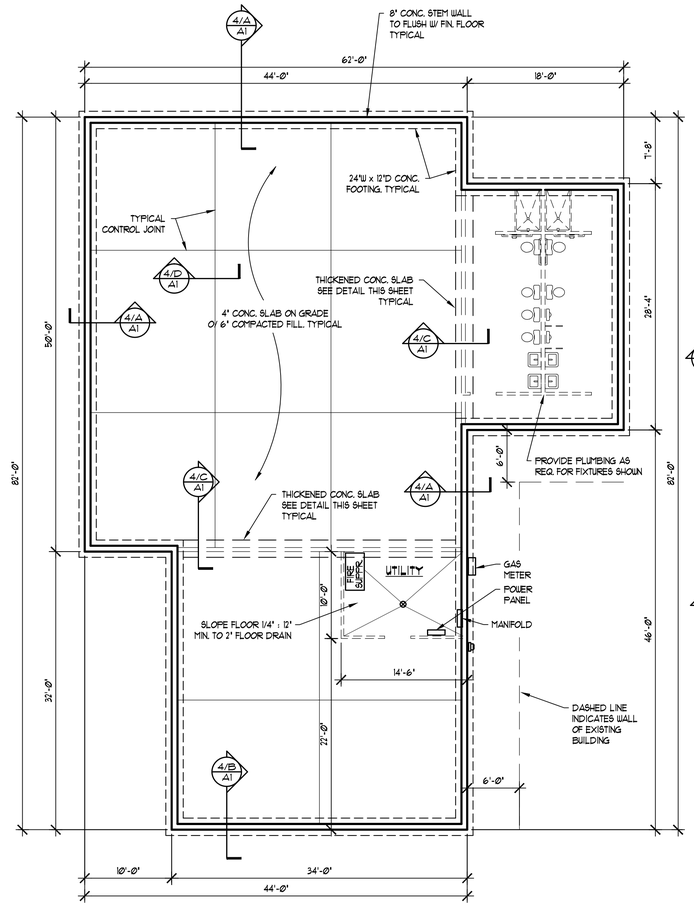

1 FOOTING / FOUNDATION PLAN

SCALE: 1/8" = 1'-0"

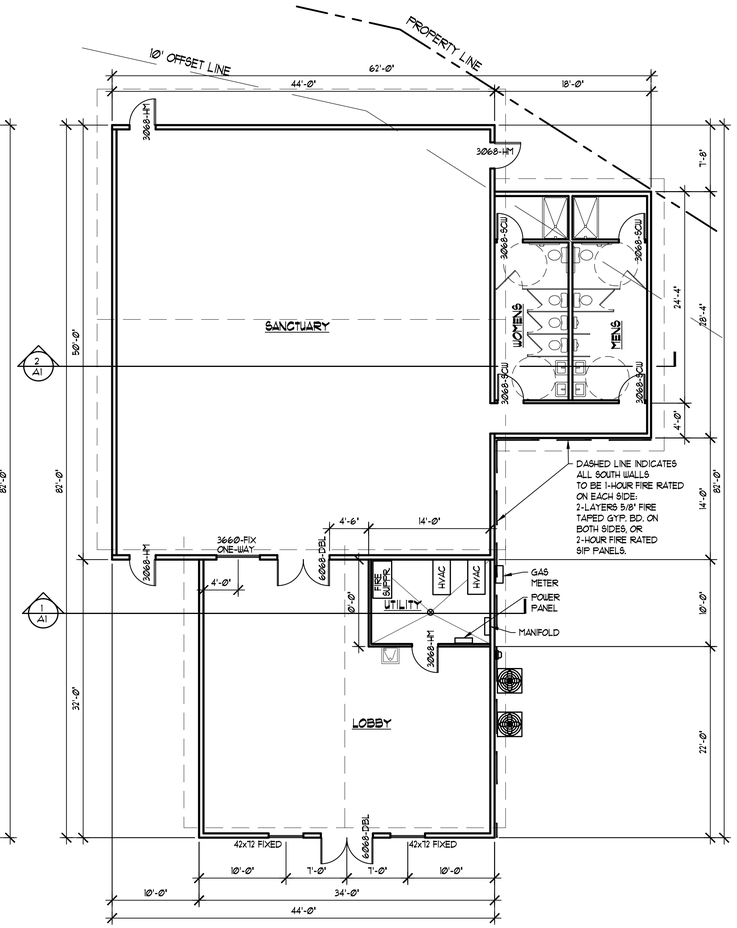

2 FLOOR PLAN

SCALE: 1/8" = 1'-0"

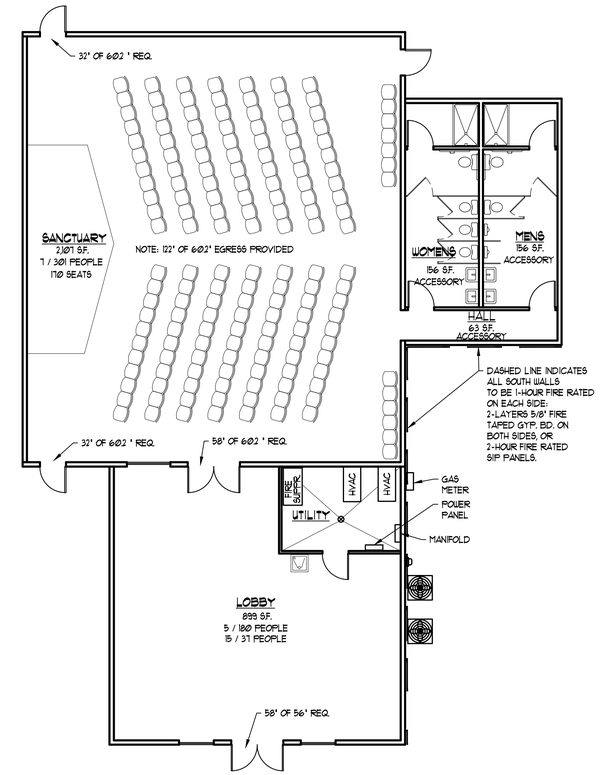

3 FURNITURE / EXIT PLAN

SCALE: 1/8" = 1'-0"

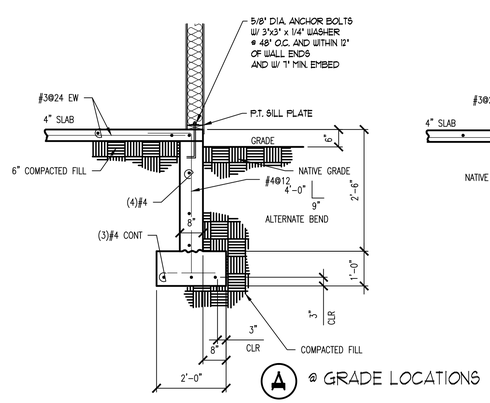

A @ GRADE LOCATIONS

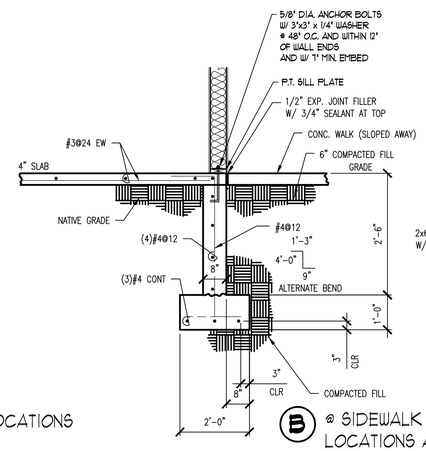

B @ SIDEWALK LOCATIONS AND DOOR LOCATIONS

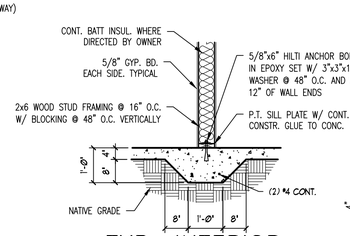

C TYP. INTERIOR THICKENED SLAB

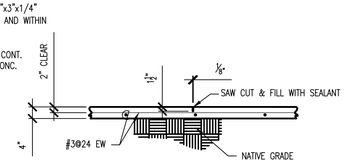

D TYP. CONTROL JOINT

4 FOUNDATION DETAILS

SCALE: 1/2" = 1'-0"

NO.	REVISIONS:	DATE:

STAMP:

NEW ADDITION FOR:

PROJECT: FIRST BAPTIST CHURCH

172 N 7th Street NEW CASTLE, CO

DRAWING TITLE: FOOTING / FOUNDATION PLAN, FLOOR PLAN, FURNITURE / EXIT / CODE PLAN, FOUNDATION DETAILS

PROJECT No. 15-007

DATE: 12/27/2015

SHEET No: A1